ROTEX®

Torsionally flexible jaw couplings

AFN, BFN, CF, CFN, DF, DFN
and their combinations

according to directive 2014/34/EU and UK directive SI 2016 No. 1107

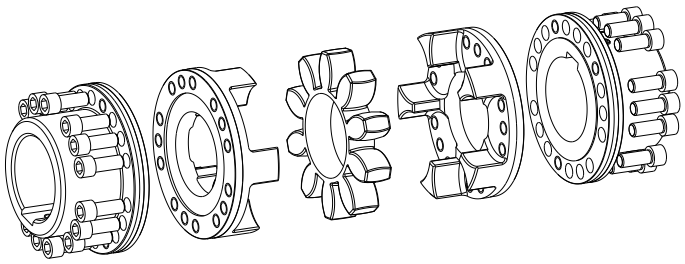

Type AFN

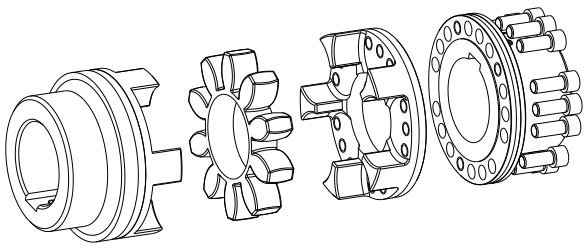

Type BFN

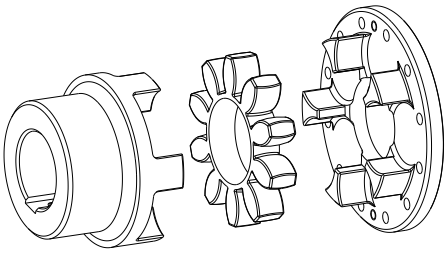

Type CF

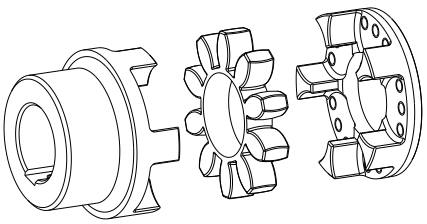

Type CFN

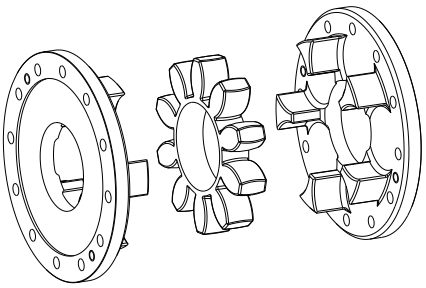

Type DF

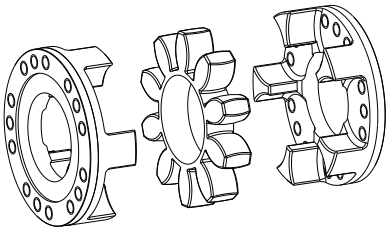

Type DFN

ROTEX® is a torsionally flexible jaw coupling. It is able to compensate for shaft misalignment, for example caused by manufacturing inaccuracies, thermal expansion, etc.

- Type AFN allows to replace a spider without having to disassemble the driving resp. driven machine.
- Type BFN ensures the power flow without having to disassemble the driving or driven machine and allows for radial disassembly without axial movement of the driving machine.
- Types CF, CFN, DF and DFN are flange types.

Table of contents

1 Technical data 4

2 Advice 6

2.1 General advice 6
2.2 Safety and advice symbols 6
2.3 General hazard warnings 6
2.4 Proper use 7
2.5 Coupling selection 7
2.6 Reference to EC Machinery Directive 2006/42/EC 7

3 Storage, transport and packaging 8

3.1 Storage 8
3.2 Transport and packaging 8

4 Assembly 8

4.1 Components of the coupling 8
4.2 Advice for finish bore 11
4.3 Assembly of the coupling (general) 13
4.4 Assembly of type AFN 14
4.5 Assembly of type BFN 15
4.6 Assembly of type CF and CFN 16
4.7 Assembly of type DF and DFN 17
4.8 Displacements - alignment of the couplings 18

5 Start-up 19

6 Breakdowns, causes and elimination 20

7 Disposal 22

8 Maintenance and service 23

9 Spares inventory, customer service addresses 23

Table of contents

10 Enclosure A

Advice and instructions regarding the use in Ex potentially explosive atmospheres 24

10.1 Intended use in Ex potentially explosive atmospheres 25

10.2 Inspection intervals for couplings in Ex potentially explosive atmospheres 26

10.3 Standard values of wear 28

10.4 Ex marking of coupling for potentially explosive atmospheres 29

10.5 EU Certificate of conformity 31

10.6 UK Declaration of conformity 32

1 Technical data

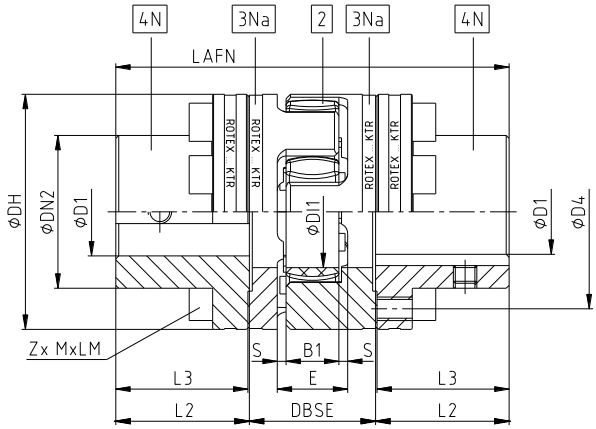

Illustration 1: ROTEX® type AFN

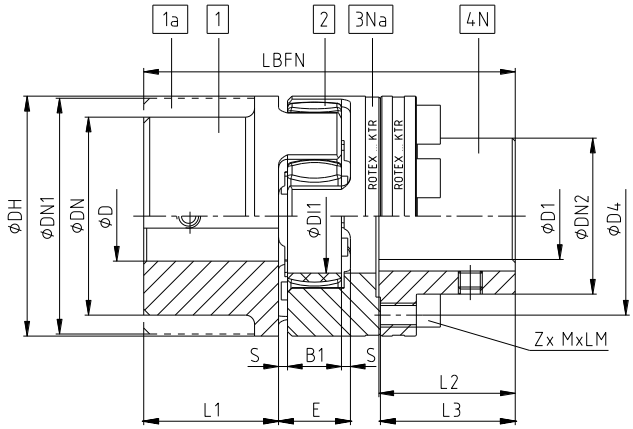

Illustration 2: ROTEX® type BFN

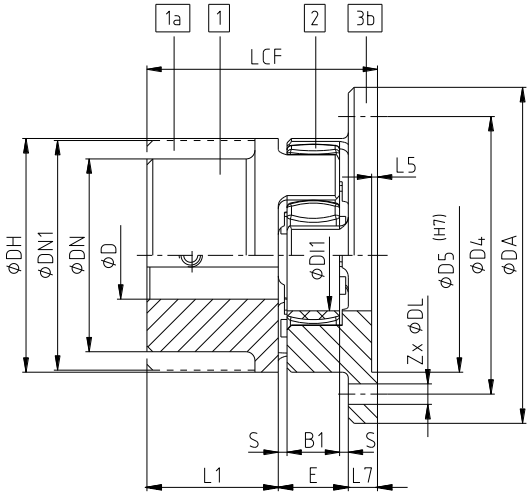

Illustration 3: ROTEX® type CF

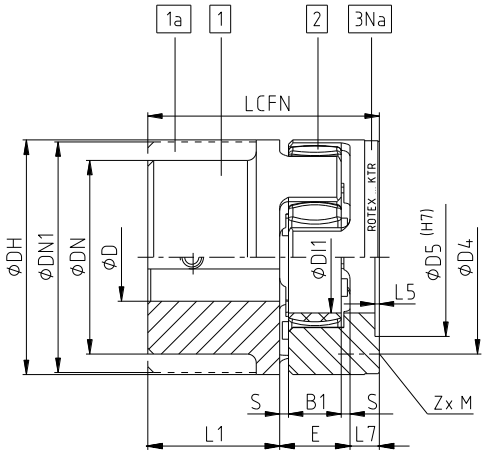

Illustration 4: ROTEX® type CFN

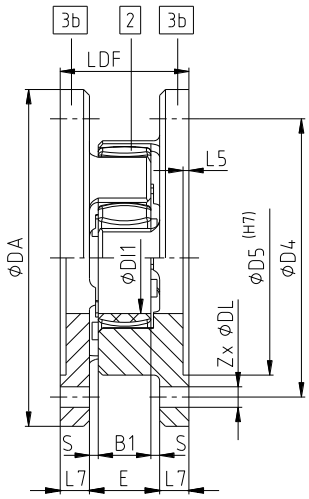

Illustration 5: ROTEX® type DF

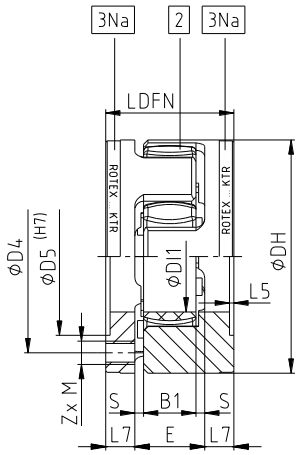

Illustration 6: ROTEX® type DFN

ROTEX® couplings with attachments that can generate heat, sparks and static charging (e. g. combinations with brake drums, brake disks, overload systems such as torque limiters, fan impellers etc.) are <u>not</u> permitted for the use in potentially explosive atmospheres. A separate analysis must be performed.

1 Technical data

Table 1: Technical data and dimensions

Size	Compo-nent	Spider [1] (component 2) Rated torque [Nm]			Dimensions [mm]							
					Max. finish bore [2]			General				
					D		Component 4N					
		92 ShA	98 ShA	64 ShD	[3]	Steel	D1	DH	DI1	DN, DN1	DN2	DBSE
24	1	35	60	75	24	-	27	56 [4]	27	40	36	33
	1a				28	35				56		
28	1	95	160	200	28	-	30	66 [4]	30	48	42	39
	1a				38	40				66		
38	1	190	325	405	40	48	38	80	38	66	52	43
	1a				48	-				78		
42	1	265	450	560	45	55	45	95	46	75	62	48
	1a				55	-				94		
48	1	310	525	655	52	62	50	105	51	85	70	50
	1a				62	-				104		
55	1	410	685	825	60	74	60	120	60	98	80	60
	1a				74	-				118		
65	1	625	940	1175	70	80	70	135	68	115	94	65
75	1	1280	1920	2400	80	95	80	160	80	135	108	75
90	1	2400	3600	4500	97	110	105	200	100	160	142	82
100	1	3300	4950	6185	115	-	115	225	113	180	158	97
110	1	4800	7200	9000	125	-	130	255	127	200	178	103
125	1	6650	10000	12500	145	-	150	290	147	230	206	116
140	1	8550	12800	16000	160	-	170	320	165	255	235	128
160	1	12800	19200	24000	185	-	200	370	190	290	270	146
180	1	18650	28000	35000	200	-	230	420	220	325	315	159

Size	Dimensions [mm]												
	E	B1	S	L1, L2	L3	L5	L7	LAFN	LBFN	LCF	LCFN	LDF	LDFN
24	18	14	2.0	30	30.5	1.5	8	94	86	56	56	34	34
28	20	15	2.5	35	35.5	1.5	10	110	100	65	65	40	40
38	24	18	3.0	45	45.5	1.5	10	134	124	79	79	44	44
42	26	20	3.0	50	51.0	2.0	12	150	138	88	88	50	50
48	28	21	3.5	56	57.0	2.0	12	164	152	96	96	52	52
55	30	22	4.0	65	66.0	2.0	16	192	176	111	111	62	62
65	35	26	4.5	75	76.0	2.0	16	217	201	126	126	67	67
75	40	30	5.0	85	86.5	2.5	19	248	229	144	144	78	78
90	45	34	5.5	100	101.5	3.0	20	285	265	165	165	85	85
100	50	38	6.0	110	111.5	4.0	25	320	295	185	185	100	100
110	55	42	6.5	120	122.0	4.0	26	347	321	201	201	107	107
125	60	46	7.0	140	142.0	5.0	30	400	370	230	230	120	120
140	65	50	7.5	155	157.5	5.0	34	443	409	254	254	133	133
160	75	57	9.0	175	177.5	5.0	38	501	463	288	288	151	151
180	85	64	10.5	195	198.0	5.5	40	555	515	320	320	165	165

Size	Dimensions [mm]										
	CF and DF					AFN, BFN, CFN and DFN					
	DA	D4	D5	Z	DL	D4	D5	Z	MxLM	T_A [Nm]	pitch [5]
24	80	65	55	5	4.5	45	36	8	M5x16	10	8x45°
28	100	80	65	6	6.6	54	44	8	M6x20	17	8x45°
38	115	95	80	6	6.6	66	54	8	M8x22	41	8x45°
42	140	115	95	6	9.0	80	65	12	M8x25	41	16x22.5°
48	150	125	105	8	9.0	90	75	12	M8x25	41	16x22.5°
55	175	145	120	8	11.0	102	84	8	M10x30	83	8x45°
65	190	160	135	10	11.0	116	96	12	M10x30	83	16x22.5°
75	215	185	160	10	13.5	136	112	15	M12x40	120	20x18°
90	260	225	200	12	13.5	172	145	15	M16x40	295	20x18°
100	285	250	225	12	13.5	195	165	15	M16x50	295	20x18°
110	330	290	255	12	18.0	218	180	15	M20x50	580	20x18°
125	370	325	290	16	18.0	252	215	15	M20x60	580	20x18°
140	410	360	320	16	22.0	282	245	15	M20x60	580	20x18°
160	460	410	370	16	26.0	325	280	15	M24x70	1000	20x18°
180	520	465	420	16	26.0	375	330	18	M24x80	1000	24x15°

1) Maximum torque of the coupling $T_{Kmax.}$ = Rated torque of the coupling T_{KN} x 2
2) Bores H7 with keyway to DIN 6885 sheet 1 [JS9] and setscrew
3) Size 24 and 28 material: Al-D; size 38 to 90 material: EN-GJL-250; size 100 to 180 material: EN-GJS-400-15
4) Material steel: size 24 = 55 mm; size 28 = 65 mm
5) Thread in the driving flange between the cams.

2 Advice

2.1 General advice

Please read through these operating/assembly instructions carefully before you start up the coupling.
Please pay special attention to the safety instructions!

The **ROTEX®** coupling is suitable and approved for the use in potentially explosive atmospheres. When using the coupling in potentially explosive atmospheres, observe the special advice and instructions regarding safety in enclosure A.

The operating/assembly instructions are part of your product. Please store them carefully and close to the coupling. The copyright for these operating/assembly instructions remains with KTR.

2.2 Safety and advice symbols

Warning of potentially explosive atmospheres	This symbol indicates notes which may contribute to preventing bodily injuries or serious bodily injuries that may result in death caused by explosion.
Warning of personal injury	This symbol indicates notes which may contribute to preventing bodily injuries or serious bodily injuries that may result in death.
Warning of product damages	This symbol indicates notes which may contribute to preventing material or machine damage.
General advice	This symbol indicates notes which may contribute to preventing adverse results or conditions.
Warning of hot surfaces	This symbol indicates notes which may contribute to preventing burns with hot surfaces resulting in light to serious bodily injuries.

2.3 General hazard warnings

With assembly, operation and maintenance of the coupling it has to be made sure that the entire drive train is secured against accidental switch-on. You may be seriously hurt by rotating parts. Make absolutely sure to read through and observe the following safety indications.

- All operations on and with the coupling have to be performed taking into account "safety first".
- Make sure to switch off the power pack before you perform your work on the coupling.
- Secure the power pack against accidental switch-on, e. g. by providing warning signs at the place of switch-on or removing the fuse for current supply.
- Do not reach into the operating area of the coupling as long as it is in operation.
- Secure the coupling against accidental contact. Provide for the necessary protection devices and covers.

2 Advice

2.4 Proper use

You may only assemble, operate and maintain the coupling if you

- have carefully read through the operating/assembly instructions and understood them
- are technically qualified and specifically trained (e. g. safety, environment, logistics)
- are authorized by your company

The coupling may only be used in accordance with the technical data (see chapter 1). Unauthorized modifications on the coupling design are not admissible. We will not assume liability for any damage that may arise. In the interest of further development we reserve the right for technical modifications.
The **ROTEX®** described in here corresponds to the state of the art at the time of printing of these operating/assembly instructions.

2.5 Coupling selection

For a permanent and failure-free operation of the coupling it must be selected according to the selection instructions (according to DIN 740 part 2) for the particular application (see catalogue drive technology "ROTEX®").
If the operating conditions (performance, speed, modifications on engine and machine) change, the coupling selection must be reviewed.
Make sure that the technical data regarding torque refer to the spider only. The transmittable torque of the shaft-hub-connection must be reviewed by the customer and is subject to his responsibility.

For drives subject to torsional vibrations (drives with cyclic stress due to torsional vibrations) it is necessary to perform a torsional vibration calculation to ensure a reliable selection. Typical drives subject to torsional vibrations are e. g. drives with diesel engines, piston pumps, piston compressors etc. If requested, KTR will perform the coupling selection and the torsional vibration calculation.

2.6 Reference to EC Machinery Directive 2006/42/EC

The couplings supplied by KTR should be considered as components, not machines or partly completed machines according to EC Machinery Directive 2006/42/EC. Consequently KTR does not have to issue a declaration of incorporation. For details about safe assembly, start-up and safe operation refer to the present operating/assembly instructions considering the warnings.

3 Storage, transport and packaging

3.1 Storage

The coupling hubs are supplied in preserved condition and can be stored in a dry and roofed place for 6 - 9 months.
The features of the coupling spiders (elastomers) remain unchanged for up to 5 years with favourable storage conditions.

The storage rooms must not include any ozone-generating devices like e. g. fluorescent light sources, mercury-vapour lamps or electrical high-voltage appliances.
Humid storage rooms are not suitable.
Make sure that condensation is not generated. The best relative air humidity is less than 65 %.

3.2 Transport and packaging

In order to avoid any injuries and any kind of damage always make use of proper transport and lifting equipment.

The couplings are packed differently each depending on size, number and kind of transport. Unless otherwise contractually agreed, packaging will follow the in-house packaging specifications of KTR.

4 Assembly

The coupling is generally supplied in individual parts. Before assembly the coupling has to be inspected for completeness.

4.1 Components of the coupling

Components of ROTEX® type AFN

Component	Quantity	Description
2	1	Spider
3Na	2	Driving flange N
4N	2	Coupling flange N
5	see table 3 1)	Cap screws DIN EN ISO 4762 - 12.9
6	2	Setscrews DIN EN ISO 4029

1) each coupling half

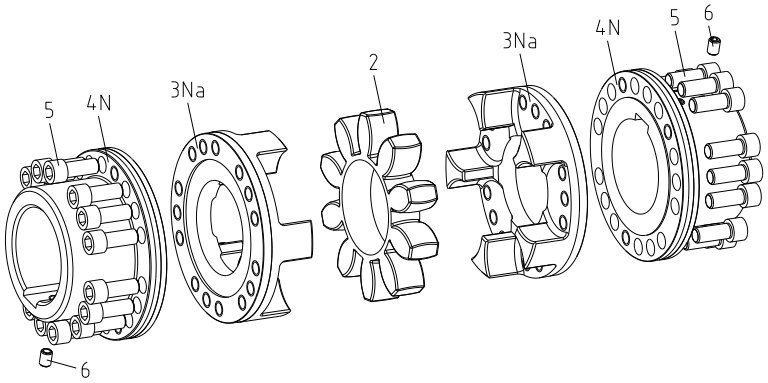

Illustration 7: ROTEX® type AFN

4 Assembly

4.1 Components of the coupling

Components of ROTEX® type BFN

Component	Quantity	Description
1	1	Hub
2	1	Spider
3Na	1	Driving flange N
4N	1	Coupling flange N
5	see table 3	Cap screws DIN EN ISO 4762 - 12.9
6	2	Setscrews DIN EN ISO 4029

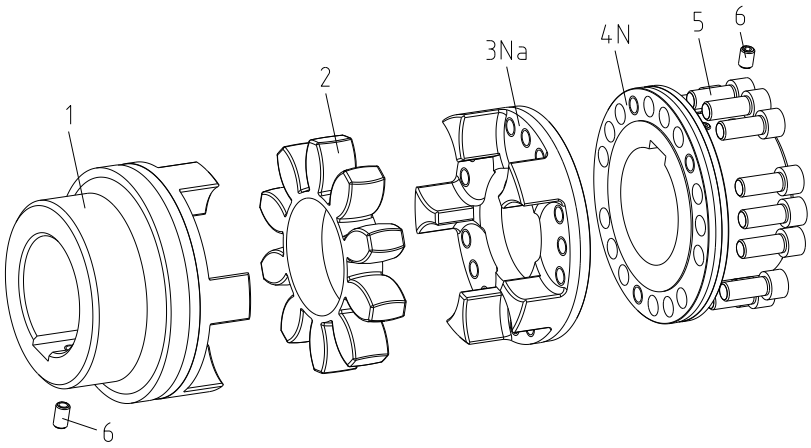

Illustration 8: ROTEX® type BFN

Components of ROTEX® type CF

Component	Quantity	Description
1	1	Hub
2	1	Spider
3b	1	Driving flange type B
6	1	Setscrews DIN EN ISO 4029

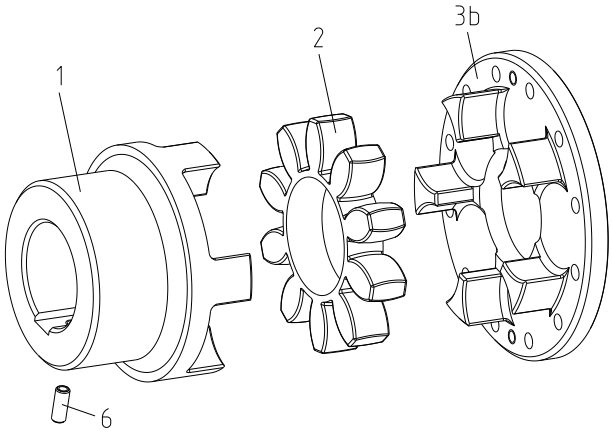

Illustration 9: ROTEX® type CF

4 Assembly

4.1 Components of the coupling

Components of ROTEX® type CFN

Component	Quantity	Description
1	1	Hub
2	1	Spider
3Na	1	Driving flange N
6	1	Setscrews DIN EN ISO 4029

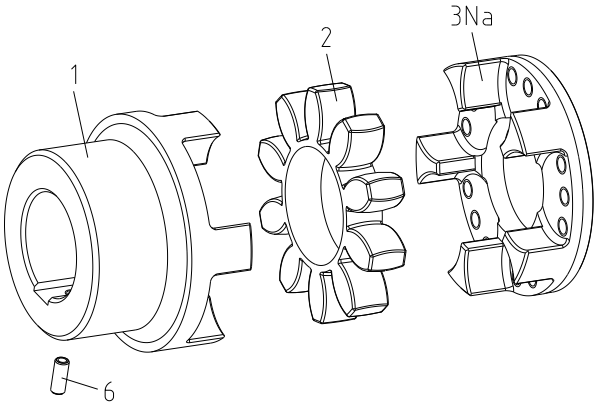

Illustration 10: ROTEX® type CFN

Components of ROTEX® type DF

Component	Quantity	Description
2	1	Spider
3b	2	Driving flange type B

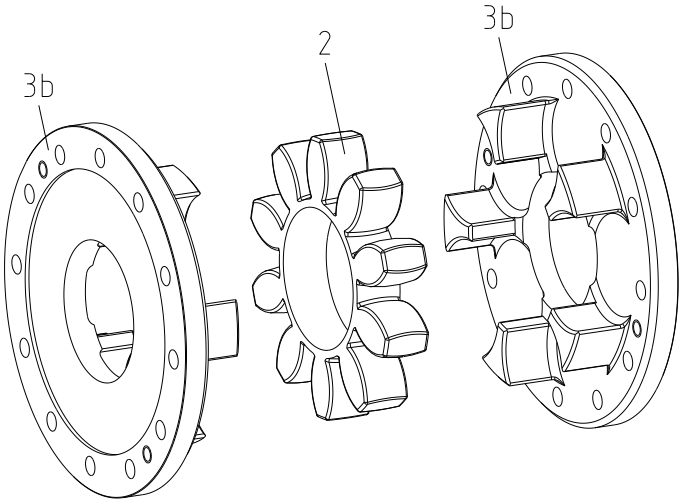

Illustration 11: ROTEX® type DF

4 Assembly

4.1 Components of the coupling

Components of ROTEX® type DFN

Component	Quantity	Description
2	1	Spider
3Na	2	Driving flange N

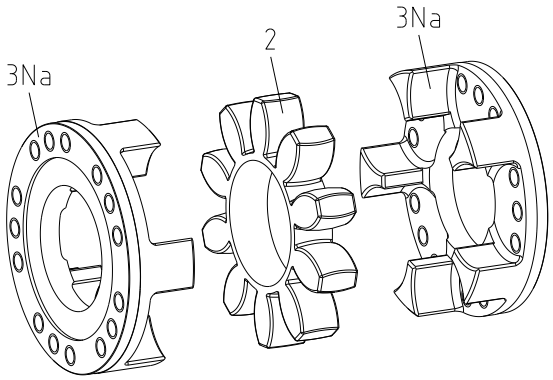

Illustration 12: ROTEX® type DFN

Features of standard spiders

Spider hardness (Shore)	92 Shore A		98 Shore A		64 Shore D	
	T-PUR® (orange)	PUR (yellow)	T-PUR® (purple)	PUR (red)	T-PUR® (light green)	PUR (natural white [1])
Marking (colour)						

1) Natural white with green marking of teeth

4.2 Advice for finish bore

STOP

The maximum permissible bore diameters D (see chapter 1 - technical data) must not be exceeded. If these figures are disregarded, the coupling may tear. Rotating particles may cause danger to life.

- Hub bores machined by the customer have to observe concentricity resp. axial runout (see illustration 13).
- Make absolutely sure to observe the figures for ØD.
- Carefully align the hubs when the finish bores are drilled.
- **Only valid with design AFN, BFN, CF and CFN:** Provide for a setscrew according to DIN EN ISO 4029 with a cup point or an end plate to fasten the hubs axially.

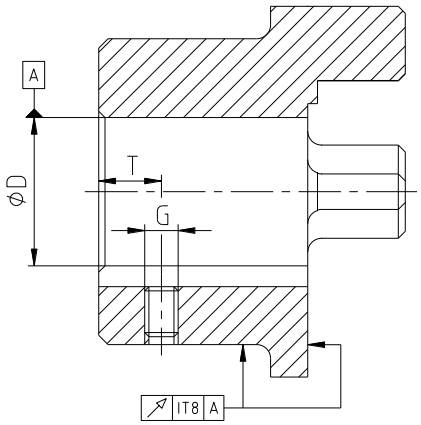

Illustration 13: Concentricity and axial runout

4 Assembly

4.2 Advice for finish bore

The customer bears the sole responsibility for all machining processes performed subsequently on unbored or pilot bored as well as finish machined coupling components and spare parts. KTR does not assume any warranty claims resulting from insufficient remachining.

KTR supplies unbored or pilot bored coupling components and spare parts only upon explicit request of the customer. These parts are additionally marked with the symbol Ⓤ.

Reference to unbored resp. pilot bored coupling components with explosion protection marking:
Basically the company KTR Systems GmbH supplies couplings resp. coupling hubs with explosion protection marking as an unbored or pilot bored type only on explicit request of the customer. The prerequisite is a declaration of exemption submitted by the customer assuming any responsibility and liability for respective remachining performed on the product of KTR Systems GmbH.

Table 2: Setscrew DIN EN ISO 4029

Size	24	28	38	42	48	55	65	75	90	100	110	125	140	160	180
Dimension G	M5	M8	M8	M8	M8	M10	M10	M10	M12	M12	M16	M16	M20	M20	M20
Dimension T	10	15	15	20	20	20	20	25	30	30	35	40	45	50	50
Tightening torque T_A [Nm]	2	10	10	10	10	17	17	17	40	40	80	80	140	140	140

Table 3: Recommended fit pairs acc. to DIN 748/1

Bore [mm] above	Bore [mm] up to	Shaft tolerance	Bore tolerance
	50	k6	H7 (KTR standard)
50		m6	

If a feather keyway is intended to be used in the hub, it should correspond to the tolerance ISO JS9 (KTR standard) with standard operating conditions or ISO P9 with sophisticated operating conditions (frequently alternating torsional direction, shock loads, etc.). The keyway should preferably be located between the cams. With axial fastening via setscrew the tapped hole should be positioned on the keyway except for AI-D which should be positioned opposite the keyway.

The transmittable torque of the shaft-hub-connection must be reviewed by the customer and is subject to his responsibility.

4 Assembly

4.3 Assembly of the coupling (general)

We recommend to inspect bores, shaft, keyway and feather key for dimensional accuracy before assembly.

Heating the hubs or coupling flanges lightly (approx. 80 °C) allows for an easier mounting on the shaft.

Please pay attention to the ignition risk in potentially explosive atmospheres!

Touching the heated hubs causes burns.
Please wear safety gloves.

With the assembly make sure that the distance dimension E (see table 1) is observed to allow for axial clearance of the spider when in operation.
Disregarding this advice may cause damage to the coupling.

If used in potentially explosive atmospheres the setscrews to fasten the hubs as well as all screw connections must be secured against working loose additionally, e. g. conglutinating with Loctite (average strength).

4 Assembly

4.4 Assembly of type AFN

- Mount the coupling flanges on the shaft of driving and driven side (see illustration 14).
- The internal sides of the coupling flanges must be flush with the front sides of the shafts.
- Shift the power packs in axial direction until the distance dimension DBSE is achieved (see illustration 1 and table 1).
- Fasten the coupling flanges by tightening the setscrews DIN EN ISO 4029 with a cup point (tightening torque see table 2).
- Plug the driving flanges and the spider together (see illustration 15).

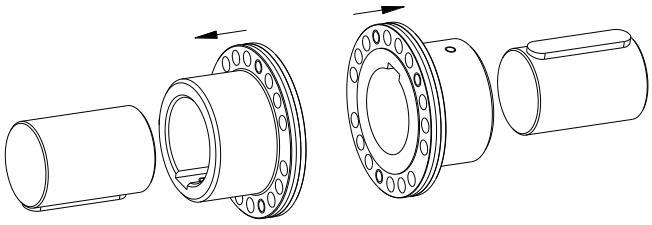

Illustration 14: Assembly of coupling flanges

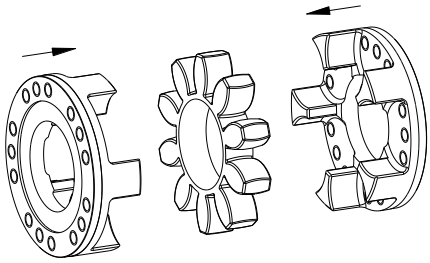

Illustration 15: Assembly of driving flange and spider

- Put the components plugged together between the coupling flanges (see illustration 16).
- Hand-tighten the components first.
- Tighten the screws at the tightening torques T_A specified in table 3 by means of a suitable torque key.
- Centre the spider between the driving flanges and check the dimensions E and S (see illustration 1 and table 1).

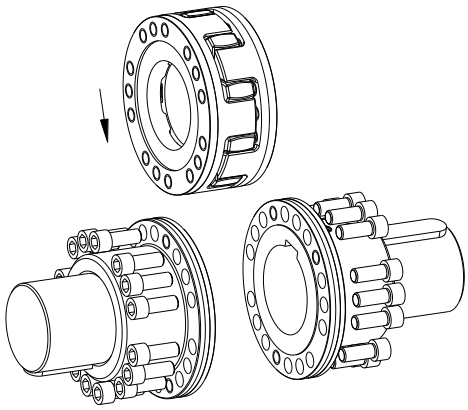

Illustration 16: Assembly of component assembly

Having started up the coupling, the wear of spider has to be inspected at regular maintenance intervals and the spider has to be replaced, if necessary.

4 Assembly

4.5 Assembly of type BFN

- Mount the coupling flange on the shaft of the driving side and the hub onto the shaft of the driven side (see illustration 17).
- The internal sides of the components must be flush with the front sides of the shafts.
- Fasten the hub and coupling flange by tightening the setscrews DIN EN ISO 4029 with a cup point (tightening torques see table 2).

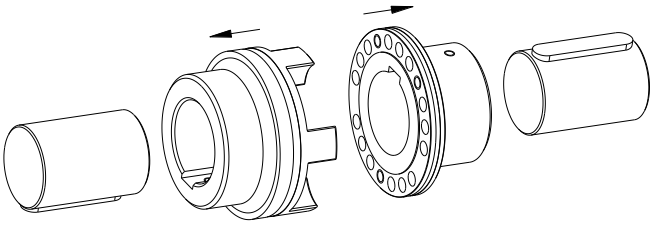

Illustration 17: Assembly of hub or coupling flange

- Insert the driving flange in front of the coupling flange (see illustration 18).
- Hand-tighten the components first.
- Tighten the screws at the tightening torques T_A specified in table 1 by means of a suitable torque key.

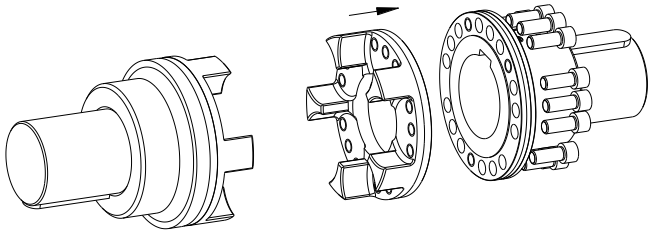

Illustration 18: Assembly of driving flange

- Insert the spider in the cam section of the hub (see illustration 19).
- Shift the power packs in axial direction until the distance dimension E is achieved (see illustration 2 and table 1).
- Centre the spider between the hub and the coupling flange and check the dimension E and S (see illustration 2 and table 1).

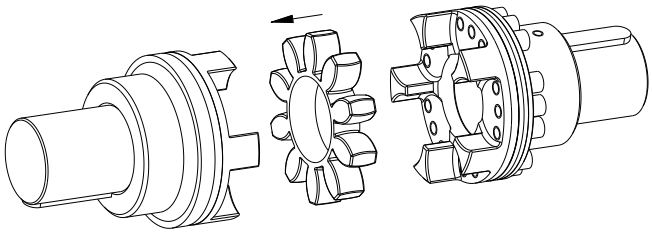

Illustration 19: Assembly of spider

Having started up the coupling, the wear of spider has to be inspected at regular maintenance intervals and the spider has to be replaced, if necessary.

Hubs without feather keyway may be used in category 3 <u>only</u> and are marked with category 3 accordingly.

4 Assembly

4.6 Assembly of type CF and CFN

- Mount the hub on the shaft (see illustration 20).
- The internal side of the hub must be flush with the face of the shaft.
- Fasten the hub by tightening the setscrew DIN EN ISO 4029 with a cup point (tightening torques see table 2).

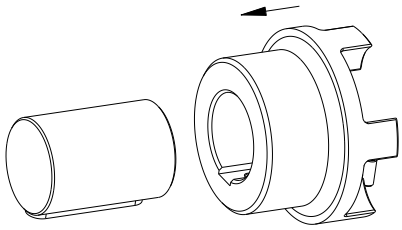

Illustration 20: Assembly of hub

- Insert the driving flange in front of the flange of driving or driven side (see illustration 21 type CF and illustration 22 type CFN).
- Hand-tighten the components first.
- Tighten the screws at the tightening torques T_A specified in table 1 by means of a suitable torque key.

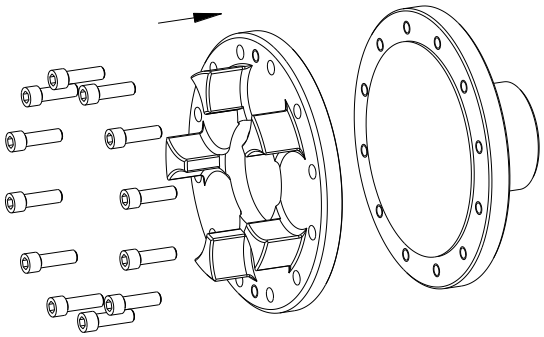

Illustration 21: Assembly of driving flange (type CF)

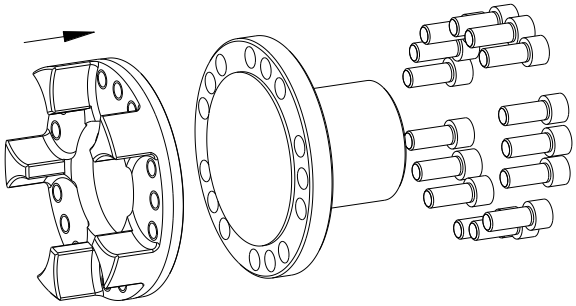

Illustration 22: Assembly of driving flange (type CFN)

- Insert the spider in the cam section of the hub (see illustration 23).
- Push the machines to be coupled together.
- Centre the spider between the hub and the driving flange and check the dimension E and S (see illustration 3 type CF and illustration 4 type CFN).

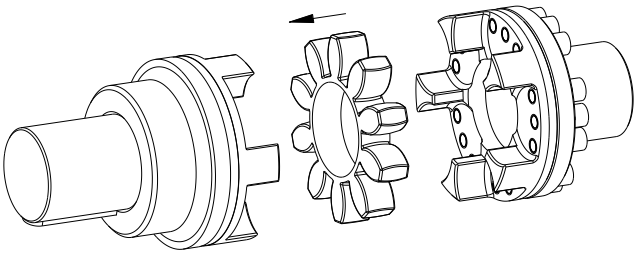

Illustration 23: Assembly of spider

Having started up the coupling, the wear of spider has to be inspected at regular maintenance intervals and the spider has to be replaced, if necessary.

Hubs without feather keyway may be used in category 3 <u>only</u> and are marked with category 3 accordingly.

4 Assembly

4.7 Assembly of type DF and DFN

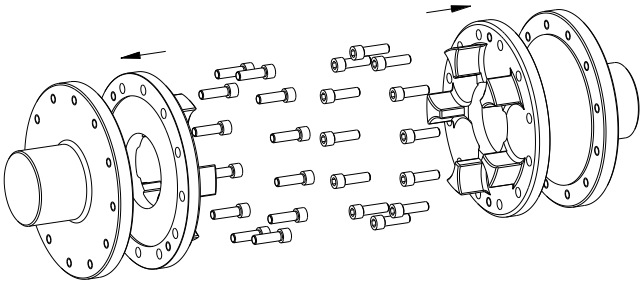

Illustration 24: Assembly of driving flanges (type DF)

- Insert the driving flanges in front of the flanges of driving and driven side (see illustration 24 type DF and illustration 25 type DFN).
- Hand-tighten the components first.
- Tighten the screws at the tightening torques T_A specified in table 1 by means of a suitable torque key.

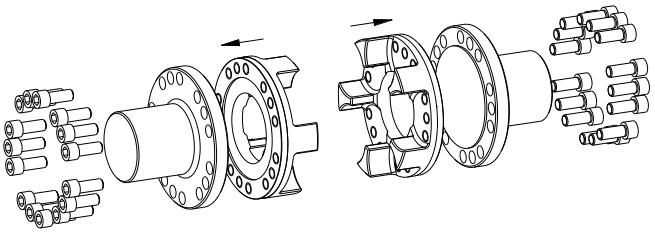

Illustration25: Assembly of driving flanges (type DFN)

- Insert the spider in the cam section of the driving flange on the driving or driven side (see illustration 26).
- Push the machines to be coupled together.
- Centre the spider between the driving flanges and check the dimension E and S (see illustration 5 type DF and illustration 6 type DFN).

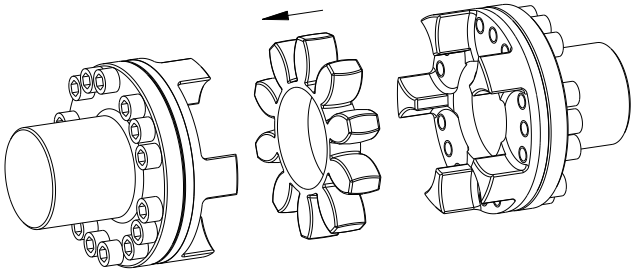

Illustration 26: Assembly of spider

Having started up the coupling, the wear of spider has to be inspected at regular maintenance intervals and the spider has to be replaced, if necessary.

4 Assembly

4.8 Displacements - alignment of the couplings

The displacement figures specified in table 4 provide for sufficient safety to compensate for external influences like, for example, thermal expansion or foundation settling.

In order to ensure a long service life of the coupling and avoid hazards with the use in potentially explosive atmospheres, the shaft ends must be accurately aligned.
Please absolutely observe the displacement figures specified (see table 4). If the figures are exceeded, the coupling will be damaged.
The more accurate the alignment of the coupling, the longer is its service life.
If used in potentially explosive atmospheres for explosion group IIC, only half of the displacement figures (see table 4) are permissible.

Please note:

- The displacement figures specified in table 4 are maximum figures which must not arise in parallel. If radial and angular displacements arise simultaneously, the permissible displacement values may only be used proportionally (see illustration 28).
- Inspect with a dial gauge, ruler or feeler gauge whether the permissible displacement figures specified in table 4 can be observed.

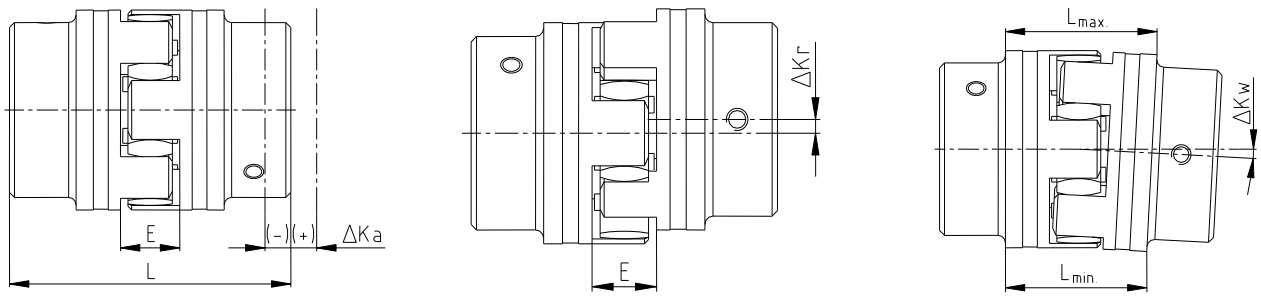

Axial displacements | Radial displacements | Angular displacements

$L_{max} = L + \Delta K_a$ [mm]

$\Delta K_w = L_{1max.} - L_{1min.}$ [mm]

Illustration 27: Displacements

Examples of the displacement combinations specified in illustration 28:

Example 1:
$\Delta K_r = 30\ \%$
$\Delta K_w = 70\ \%$

Example 2:
$\Delta K_r = 60\ \%$
$\Delta K_w = 40\ \%$

$\Delta K_{total} = \Delta K_r + \Delta K_w \leq 100\ \%$

Illustration 28: Combinations of displacement

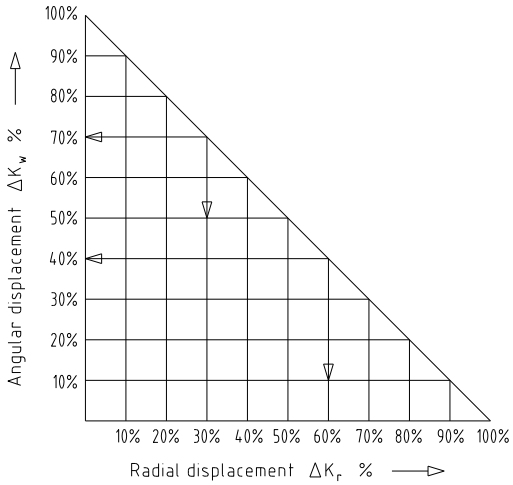

4 Assembly

4.8 Displacements - alignment of the couplings

Table 4: Displacement figures

Size		24	28	38	42	48	55	65	75	90	100	110	125	140	160	180
Max. axial displacement ΔK_a [mm]		-0.5	-0.7	-0.7	-1.0	-1.0	-1.0	-1.0	-1.5	-1.5	-1.5	-2.0	-2.0	-2.0	-2.5	-3.0
		+1.4	+1.5	+1.8	+2.0	+2.1	+2.2	+2.6	+3.0	+3.4	+3.8	+4.2	+4.6	+5.0	+5.7	+6.4
Max. radial displacement ΔK_r [mm] with n =	1500 rpm	0.22	0.25	0.28	0.32	0.36	0.38	0.42	0.48	0.50	0.52	0.55	0.60	0.62	0.64	0.68
	3000 rpm	0.15	0.17	0.19	0.21	0.25	0.26	0.28	0.32	0.34	0.36	0.38	-	-	-	-
Max. angular displacement ΔK_w with n=1500 rpm	[degree]	0.9	0.9	1.0	1.0	1.1	1.1	1.2	1.2	1.2	1.2	1.3	1.3	1.2	1.2	1.2
	[mm]	0.85	1.05	1.35	1.70	2.00	2.30	2.70	3.30	4.30	4.80	5.60	6.50	6.60	7.60	9.00
Max. angular displacement ΔK_w with n=3000 rpm	[degree]	0.8	0.8	0.8	0.8	0.9	1.0	1.0	1.0	1.1	1.1	1.1	-	-	-	-
	[mm]	0.75	0.84	1.10	1.40	1.60	2.00	2.30	2.90	3.80	4.20	5.00	-	-	-	-

5 Start-up

Before start-up of the coupling, inspect the tightening of the setscrews in the hubs, the alignment and the distance dimension E and adjust, if necessary, and also inspect all screw connections for the tightening torques specified.

If used in potentially explosive atmospheres the setscrews to fasten the hubs as well as all screw connections must be secured against working loose additionally, e. g. conglutinating with Loctite (average strength).

Finally the coupling protection against accidental contact must be fitted. It is required in accordance with DIN EN ISO 12100 (Safety of Machinery) and directives 2014/34/EU and SI 2016 No. 1107 and must protect against

- access with the little finger
- falling down of solid foreign objects.

The coupling protection is not part of KTR's scope of delivery and is the customer's responsibility. It must have sufficient distance to the rotating components to avoid contact safely. Depending on the outside diameter DH of the coupling, we recommend the following minimum distance:
ØDH to 50 mm = 6 mm, ØDH 50 mm to 120 mm = 10 mm, ØDH from 120 mm = 15 mm.

Please check if a proper enclosure (ignition protection, coupling protection, contact protection) has been mounted and the operation of the coupling is not affected by the enclosure. The same applies for test runs and rotational direction inspections.

The cover may provide for openings intended for necessary heat dissipation. These openings have to comply with DIN EN ISO 13857.
The cover must be electrically conductive and included in the equipotential bonding. Bellhousings (magnesium share below 7.5 %) made of aluminium and damping rings (NBR) can be used as connecting element between pump and electric motor. The cover may only be taken off with standstill of the unit.

5 Start-up

If the couplings are used in locations subject to dust explosion and in mining the user must make sure that there is no accumulation of dust in a dangerous volume between the cover and the coupling. The coupling must not operate in an accumulation of dust.

For covers with unlocked openings on the top face no light metals must be used if the couplings are used as equipment of equipment group II (*if possible, from stainless steel*). If the couplings are used in mining (equipment group I M2), the cover must not be made of light metal. In addition, it must be resistant to higher mechanical loads than with use as equipment of equipment group II.

During operation of the coupling, please pay attention to

- different operating noise
- vibrations occurring.

If you note any irregularities with the coupling during operation, the drive unit must be switched off immediately. The cause of the breakdown must be specified by means of the table „Breakdowns“ and, if possible, be eliminated according to the proposals. The potential breakdowns specified can be hints only. To find out the cause all operating factors and machine components must be considered.

Coating of coupling:

If coated (priming, paintings, etc.) couplings are used in potentially explosive atmospheres, the requirements on conductibility and coating thickness must be considered. With paintings up to 200 µm electrostatic load does not have to be expected. If thicker paintings resp. coatings up to a layer thickness of a maximum of 2.0 mm are applied, the couplings are not permissible for gases and vapours of category IIC in potentially explosive areas, but only for gases and vapours of category IIA and IIB.
This also applies for multiple coatings exceeding an overall thickness of 200 µm. Make sure with painting or coating that the coupling components are conductively connected with the device/devices to be connected so that the equipotential bonding is not impeded by the paint or coat applied. Basically painting of the spider is not admitted to ensure an equipotential bonding.
In addition, make sure that the marking of the coupling remains legible.

6 Breakdowns, causes and elimination

The below-mentioned failures can lead to improper use of the **ROTEX®** coupling. In addition to the specifications given in these operating/assembly instructions make sure to avoid such failures.
The errors listed can only be clues to search for the failures. When searching for the failure the adjacent components must generally be considered.

The coupling can become a source of ignition with improper use.
Directive 2014/34/EU and UK directive SI 2016 No. 1107 require special care by the manufacturer and the user.

6 Breakdowns, causes and elimination

General failures with use other than intended:

- Important data for the coupling selection are not forwarded.
- The calculation of the shaft-hub-connection is not considered.
- Coupling components with damage occurred during transport are assembled.
- If the heated hubs are assembled, the permissible temperature is exceeded.
- The clearance of the components to be assembled is not coordinated with one another.
- Tightening torques have been fallen below/exceeded.
- Components are mixed up by mistake/assembled incorrectly.
- A wrong or no spider is inserted in the coupling.
- No original **KTR** components (purchased parts) are used.
- Old/already worn out spiders or spiders stored for too long are used.
- Maintenance intervals are not observed.

Breakdowns	Causes	Hazard notes for potentially explosive atmospheres	Elimination
Different operating noise and/or vibrations occuring	Misalignment	Increased temperature on the spider surface; ignition risk by hot surfaces	1) Set the unit out of operation 2) Eliminate the reason for the misalignment (e. g. loose foundation bolts, fracture of the engine mount, heat expansion of unit components, modification of the installation dimension E of the coupling) 3) For inspection of wear see chapter 10.2
	Wear of spider, short-term torque transmission due to metal contact	Ignition risk due to sparking	1) Set the unit out of operation 2) Disassemble the coupling and remove residues of the spider 3) Inspect coupling components and replace coupling components that have been damaged 4) Insert spider, assemble coupling components 5) Inspect alignment, adjust if necessary
	Screws for axial fastening of hubs working loose	Ignition risk due to hot surfaces and sparking	1) Set the unit out of operation 2) Inspect alignment of coupling 3) Tighten the screws to fasten the hubs and secure against working loose 4) For inspection of wear see chapter 10.2
Fracture of cams	Wear of spider, torque transmission due to metal contact	Ignition risk due to sparking	1) Set the unit out of operation 2) Replace complete coupling 3) Inspect alignment
	Fracture of the cams due to high impact energy/overload		1) Set the unit out of operation 2) Replace complete coupling 3) Inspect alignment 4) Find out the reason for overload
	Operating parameters do not meet with the performance of the coupling		1) Set the unit out of operation 2) Review the operating parameters and select a bigger coupling (consider mounting space) 3) Assemble new coupling size 4) Inspect alignment
	Operating error of the unit		1) Set the unit out of operation 2) Replace complete coupling 3) Inspect alignment 4) Instruct and train the service staff

6 Breakdowns, causes and elimination

Breakdowns	Causes	Hazard notes for potentially explosive atmospheres	Elimination
Early wear of spider	Misalignment	Increased temperature on the spider surface; ignition risk by hot surfaces	1) Set the unit out of operation 2) Eliminate the reason for the misalignment (e. g. loose foundation bolts, fracture of the engine mount, heat expansion of unit components, modification of the installation dimension E of the coupling) 3) For inspection of wear see chapter 10.2
	e. g. contact with aggressive liquids/oils, ozone influence, too high/low ambient temperatures etc. causing physical modification of the spider	Ignition risk due to sparking with metallic contact of the cams Ignition risk due to sparking with metallic contact of the cams	1) Set the unit out of operation 2) Disassemble the coupling and remove residues of the spider 3) Inspect coupling components and replace coupling components that have been damaged 4) Insert spider, assemble coupling components 5) Inspect alignment, adjust if necessary 6) Make sure that further physical modifications of the spider are excluded
	Ambient/contact temperatures which are too high for the spider, max. permissible -50 °C/+120 °C		1) Set the unit out of operation 2) Disassemble the coupling and remove residues of the spider 3) Inspect coupling components and replace coupling components that have been damaged 4) Insert spider, assemble coupling components 5) Inspect alignment, adjust if necessary 6) Inspect and adjust ambient/contact temperature (correct by using other spider materials, if necessary)
Early wear of spider (liquefaction of material inside the spider cam)	Vibrations of drive		1) Set the unit out of operation 2) Disassemble the coupling and remove residues of the spider 3) Inspect coupling components and replace coupling components that have been damaged 4) Insert spider, assemble coupling components 5) Inspect alignment, adjust if necessary 6) Find out the reason for the vibrations (possibly corrective by spider with lower or higher Shore hardness)

When operating with a worn spider (see chapter 10.3) proper operation is not ensured.

7 Disposal

In respect of environmental protection we would ask you to dispose of the packaging resp. products on termination of their service life in accordance with the legal regulations resp. standards that apply.

- **Metal**
  Any metal components have to be cleaned and disposed of by scrap metal.
- **Nylon materials**
  Nylon materials have to be collected and disposed of by a waste disposal company.

8 Maintenance and service

ROTEX® is a low-maintenance coupling. We recommend to perform a visual inspection on the coupling **at least once a year**. Please pay special attention to the condition of the coupling spiders.

- Since the flexible machine bearings of the driving and driven side settle during the course of load, inspect the alignment of the coupling and re-align the coupling, if necessary.
- The coupling components have to be inspected for damages.
- The screw connections have to be inspected visually.

With the use in potentially explosive atmospheres observe chapter 10.2 "Inspection intervals for couplings in Ex potentially explosive atmospheres".

9 Spares inventory, customer service addresses

We recommend to store major spare parts on site to ensure the readiness for use of the machine in case if a coupling fails.

Contact addresses of the KTR partners for spare parts and orders can be obtained from the KTR homepage at www.ktr.com.

KTR does not assume any liability or warranty for the use of spare parts and accessories which are not provided by KTR and for the damages which may incur as a result.

KTR Systems GmbH
Carl-Zeiss-Str. 25
D-48432 Rheine
Phone: +49 5971 798-0
E-mail: mail@ktr.com

10 Enclosure A

Advice and instructions regarding the use in Ex potentially explosive atmospheres

Applicable hub designs/types:

a) Hubs that may be used in group II, category 2 and 3:
(hubs with feather keyway)

- 1.0 Hub with feather keyway and setscrew
- 1.3 Hub with spline
- 1.4 Hub with feather keyway, without setscrew
- 2.1 Clamping hub single slot with feather keyway
- 2.3 Clamping hub single slot with spline
- 2.6 Clamping hub double slot with feather keyway
- 7.1 SPLIT hub with feather keyway
- 7.6 Half shell hub (DH) with feather keyway
- 7.9 Half shell hub (H) with feather keyway
- Type AFN, BFN, CF, CFN, DF and DFN with hubs corresponding to the specifications above

b) Hubs which may be used in group II, category 3 only:
(hubs without feather keyway)

- 2.0 Clamping hub single slot without feather keyway
- 2.5 Clamping hub double slot without feather keyway
- 2.8 Clamping hub with axial slot without feather keyway
- 7.0 SPLIT hub without feather keyway
- 7.5 Half shell hub (DH) without feather keyway
- 7.8 Half shell hub (H) without feather keyway
- Type AFN, BFN, CF, CFN, DF and DFN with hubs corresponding to the specifications above

Ex **Hubs, clamping hubs or similar types without feather keyway may be used in category 3 only and are marked with category 3 accordingly.**
The hub types 1.1 and 1.2 are not approved for potentially explosive atmospheres!

10 Enclosure A

Advice and instructions regarding the use in Ex potentially explosive atmospheres

10.1 Intended use in Ex potentially explosive atmospheres

Conditions of operation in Ex potentially explosive atmospheres

The **ROTEX®** couplings are suitable for the use according to directives 2014/34/EU and SI 2016 No. 1107.

- Protection against hazards arising from lightning must follow the lightning protection concept of the machine or plant. The relevant regulations and policy for lightning protection must be observed.
- The equipotential bonding of the couplings is made by metal contact between coupling hub and shaft. This equipotential bonding must not be affected.

1. Industry (with the exception of mining)

- Equipment group II of category 2 and 3 (*coupling is not approved/not suitable for equipment group 1*)
- Substance group G (*gases, fogs, vapours*), zone 1 and 2 (*coupling is not approved/not suitable for zone 0*)
- Substance group D (*dusts*), zone 21 and 22 (*coupling is not approved/not suitable for zone 20*)
- Explosion group IIC (*gases, fogs, vapours*) *(explosion groups IIA and IIB are included in IIC)* and explosion group IIIC (*dusts*) *(explosion groups IIIA and IIIB are included in IIIC)*

Temperature class:

Temperature class	PUR / T-PUR®	
	Ambient or operating temperature T_a 1)	Max. surface temperature 2)
T4	-30 °C to +90 °C	+110 °C
T5	-30 °C to +75 °C	+95 °C
T6	-30 °C to +60 °C	+80 °C

Explanation:
The maximum surface temperatures each result from the maximum permissible ambient or operating temperature T_a plus the maximum temperature increase ΔT of 20 K to be considered. For the temperature class a safety margin subject to standard of 5 K is added.
1) The ambient or operating temperature T_a is limited to +90 °C due to the permissible permanent operating temperature of the elastomers used.
2) The maximum surface temperature of +110 °C applies for the use in locations which are potentially subject to dust explosion.

In potentially explosive atmospheres
- the ignition temperature of dusts generated must at least be 1.5 times the surface temperature to be considered
- the glow temperature must at least be the surface temperature to be considered plus a safety distance of 75 K.
- the gases and vapours generated must amount to the temperature class specified.

2. Mining

Equipment group I of category M2 (*coupling is not approved/not suitable for equipment group M1*).
Permissible ambient temperature -30 °C to +90 °C.

10 Enclosure A

Advice and instructions regarding the use in Ex potentially explosive atmospheres

10.2 Inspection intervals for couplings in Ex potentially explosive atmospheres

Equipment category	Inspection intervals
3G 3D	For couplings operated in zone 2 or zone 22 the inspection and maintenance intervals of the usual operating/assembly instructions for standard operation apply. During the standard operation which has to be taken as a basis of the ignition risk analysis the couplings are free from any ignition source. For gases, vapours and dusts generated the permissible glow and ignition temperatures specified in chapter 10.1 have to be considered and observed.
M2 2G 2D No gases and vapours of explosion group IIC	An inspection of the torsional backlash and a visual inspection of the flexible spider must be performed after 3,000 operating hours for the first time, at the latest after 6 months after start-up of the coupling. If you note insignificant or no wear on the spider upon this initial inspection, further inspections can each be performed after 6,000 operating hours or at the latest after 18 months, provided that the operating parameters remain the same. If you note significant wear during the initial inspection so that it would be recommendable to replace the spider, please find out the cause according to the table „Breakdowns“, if possible. The maintenance intervals must be adjusted to the modified operating parameters without fail.
M2 2G 2D Gases and vapours of explosion group IIC	An inspection of the torsional backlash and a visual inspection of the flexible spider must be performed after 2,000 operating hours for the first time, at the latest after 3 months after start-up of the coupling. If you note insignificant or no wear on the spider upon this initial inspection, further inspections can each be performed after 4,000 operating hours or at the latest after 12 months, provided that the operating parameters remain the same. If you note significant wear during the initial inspection so that it would be recommendable to replace the spider, please find out the cause according to the table „Breakdowns“, if possible. The maintenance intervals must be adjusted to the modified operating parameters without fail.

Hubs, clamping hubs or similar types without feather keyway may be used in category 3 only and are marked with category 3 accordingly.

10 Enclosure A

Advice and instructions regarding the use in Ex potentially explosive atmospheres

10.2 Inspection intervals for couplings in Ex potentially explosive atmospheres

ROTEX® coupling

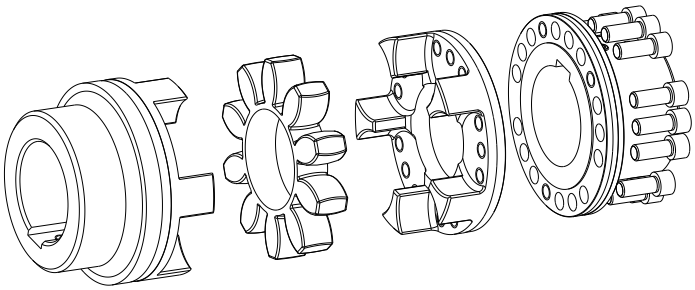

Illustration 29: ROTEX® coupling (example: type BFN)

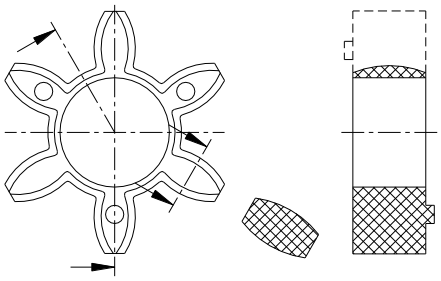

Illustration 30: ROTEX® spider

Here the backlash between the cams of the coupling and the flexible spider must be inspected by means of a feeler gauge.
When reaching the wear limit ***maximum friction***, the spider must be replaced immediately, irrespective of the inspection intervals.

10 Enclosure A

Advice and instructions regarding the use in Ex potentially explosive atmospheres

10.3 Standard values of wear

In case of backlash > X mm, the flexible spider must be replaced.

Monitoring of the general condition of the coupling can be done both at standstill and during operation. If the coupling is tested during operation, the operator must ensure an appropriate and proven test procedure (e. g. stroboscopic lamp, high-speed camera, etc.) which is definitely comparable to testing at standstill. If any distinctive features occur, an inspection must be made with the machine stopped.

Reaching the limits for replacing depends on the operating conditions and the existing operating parameters.

In order to ensure a long service life of the coupling and avoid hazards with the use in potentially explosive atmospheres, the shaft ends must be accurately aligned.
Please absolutely observe the displacement figures specified (see table 4). If the figures are exceeded, the coupling will be damaged.

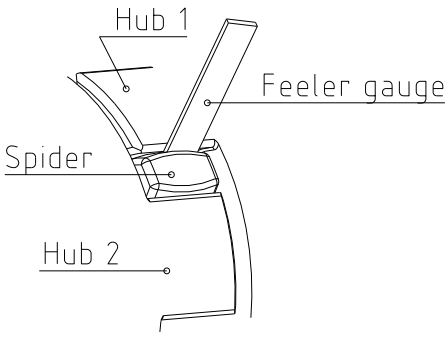

Illustration 31: Inspection of the limit of wear

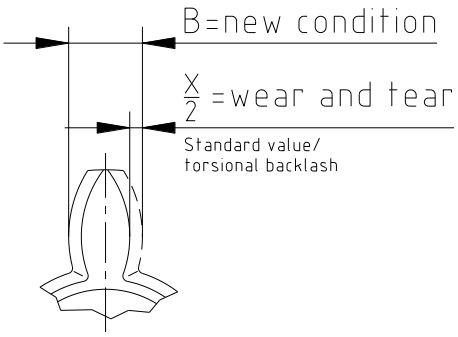

Illustration 32: Wear of spider

Table 5:

Size	Limits of wear (friction) $X_{max.}$ [mm]	Size	Limits of wear (friction) $X_{max.}$ [mm]
24	3	90	8
28	3	100	9
38	3	110	9
42	4	125	10
48	4	140	12
55	5	160	14
65	5	180	14
75	6		

10 Enclosure A

Advice and instructions regarding the use in Ex potentially explosive atmospheres

10.4 Ex marking of coupling for potentially explosive atmospheres

The explosion protection marking of the ROTEX® coupling is applied on the outer sheath or on the front side. The flexible spider is excluded.

For the complete marking refer to the operating/assembly instructions and/or the delivery note/package.

<u>The following marking applies for the products:</u>

- Type without aluminium, with feather keyway and/or clamping ring hub (Category 2)

	I M2	Ex h	I				Mb	X
	II 2G	Ex h	IIC	T6	…	T4	Gb	X
	II 2D	Ex h	IIIC	T80 °C	…	T110 °C	Db	X
<Year>		-30 °C ≤ T_a ≤		+60 °C	…	+90 °C		

KTR Systems GmbH, Carl-Zeiss-Str. 25, D-48432 Rheine

- Type without aluminium, without feather keyway (Category 3)

	I M2	Ex h	I				Mb	X
	II 3G	Ex h	IIC	T6	…	T4	Gc	X
	II 3D	Ex h	IIIC	T80 °C	…	T110 °C	Dc	X
<Year>		-30 °C ≤ T_a ≤		+60 °C	…	+90 °C		

KTR Systems GmbH, Carl-Zeiss-Str. 25, D-48432 Rheine

- Type with aluminium, with feather keyway and/or clamping ring hub (Category 2)

	II 2G	Ex h	IIC	T6	…	T4	Gb	X
	II 2D	Ex h	IIIC	T80 °C	…	T110 °C	Db	X
<Year>		-30 °C ≤ T_a ≤		+60 °C	…	+90 °C		

KTR Systems GmbH, Carl-Zeiss-Str. 25, D-48432 Rheine

- Type with aluminium, without feather keyway (Category 3)

	II 3G	Ex h	IIC	T6	…	T4	Gc	X
	II 3D	Ex h	IIIC	T80 °C	…	T110 °C	Dc	X
<Year>		-30 °C ≤ T_a ≤		+60 °C	…	+90 °C		

KTR Systems GmbH, Carl-Zeiss-Str. 25, D-48432 Rheine

<u>Short marking:</u>
(A short marking is only made if not possible differently for reason of space or functioning.)

ROTEX®
<Year>

10 Enclosure A

Advice and instructions regarding the use in Ex potentially explosive atmospheres

10.4 Ex marking of coupling for potentially explosive atmospheres

Deviating marking applied until 31st October 2019:

Short marking: CE Ex II 2GD c IIC T X/I M2 c X

Complete marking:
(valid for T-PUR® only) CE Ex II 2G c IIC T6, T5, T4 resp. T3 -50 °C ≤ T_a ≤ +65 °C, +80 °C, +115 °C resp. +120 °C
II 2D c T 140 °C/I M2 c -50 °C ≤ T_a ≤ +120 °C

Complete marking:
(valid for PUR only) CE Ex II 2G c IIC T6, T5 resp. T4 -30 °C ≤ T_a ≤ +65 °C, +80 °C resp. +90 °C
II 2D c T 110 °C/I M2 c -30 °C ≤ T_a ≤ +90 °C

Comments on marking

Equipment group I	Mining
Equipment group II	Non-mining
Equipment category 2G	Equipment ensuring a high level of safety, suitable for zone 1
Equipment category 3G	Equipment ensuring a normal level of safety, suitable for zone 2
Equipment category 2D	Equipment ensuring a high level of safety, suitable for zone 21
Equipment category 3D	Equipment ensuring a normal level of safety, suitable for zone 22
Equipment category M2	Equipment ensuring a high level of safety must be able to be switched off when an explosive atmosphere occurs
D	Dust
G	Gases and vapours
Ex h	Nonelectrical explosion protection
IIC	Gases and vapours of class IIC (including IIA and IIB)
IIIC	Electrically conductive dusts of class IIIC (including IIIA and IIIB)
T6 … T4	Temperature class to be considered, depending on the ambient temperature
T80 °C … T110 °C	Maximum surface temperature to be considered, depending on the ambient temperature
-30 °C ≤ T_a ≤ +60 °C … +90 °C or -30 °C ≤ T_a ≤ +90 °C	Permissible ambient temperature from -30 °C to +60 °C resp. -30 °C to +90 °C
Gb, Db, Mb	Equipment protection level, high level of safety, analogous to the equipment category
Gc, Dc	Equipment protection level, normal level of safety, analogous to the equipment category
X	For a safe use of the couplings particular conditions apply

If the symbol Ex was punched in addition to marking U, the coupling component was supplied by KTR as an unbored or pilot bored version (see chapter 4.2 of the present operating/assembly instructions).

10 Enclosure A

Advice and instructions regarding the use in Ex potentially explosive atmospheres

10.5 EU Certificate of conformity

EU Declaration of Conformity resp. Certificate of Conformity

corresponding to EU directive 2014/34/EU dated 26 February 2014
and to the legal regulations adopted for its implementation

The manufacturer - KTR Systems GmbH, Carl-Zeiss-Str. 25, D-48432 Rheine - states that the

flexible ROTEX® couplings

in an explosion-proof design described in these assembly instructions are equipment resp. components corresponding to article 2, 1. of directive 2014/34/EU and comply with the general safety and health specifications according to enclosure II of directive 2014/34/EU.
This declaration of conformity is issued under the sole responsibility of the manufacturers KTR Systems GmbH.

The coupling described in here complies with the specifications of the following standards/rules:

EN ISO 80079-36:2016-12
EN ISO 80079-37:2016-12
EN ISO/IEC 80079-38:2017-10
IEC/TS 60079-32-1:2020-01-24

The ROTEX® is in accordance with the specifications of directive 2014/34/EU.

According to article 13 (1) b) ii) of directive 2014/34/EU the technical documentation is deposited with the notified body (type examination certificate IBExU13ATEXB016 X):

IBExU
Institut für Sicherheitstechnik GmbH
Identification number: 0637
Fuchsmühlenweg 7

09599 Freiberg

Rheine, Place	2022-07-05 Date	i. V. Reinhard Wibbeling Engineering/R&D	i. V. Michael Brüning Product Manager

10 Enclosure A

Advice and instructions regarding the use in Ex potentially explosive atmospheres

10.6 UK Declaration of conformity

UK Declaration of Conformity resp. Certificate of Conformity

corresponding to UK directive SI 2016 No. 1107 dated 26 February 2014
and to the legal provisions adopted for its implementation

The manufacturer - KTR Systems GmbH, Carl-Zeiss-Str. 25, D-48432 Rheine - states that the

flexible ROTEX® couplings

in an explosion-proof design described in these assembly instructions are equipment resp. components corresponding to directive SI 2016 No. 1107 and comply with the general safety and health requirements according to directive SI 2016 No. 1107.
This declaration of conformity resp. certificate of conformity is issued under the sole responsibility of the manufacturer KTR Systems GmbH.

The coupling described in here complies with the specifications of the following standards/rules:

EN ISO 80079-36:2016-12
EN ISO 80079-37:2016-12
EN ISO/IEC 80079-38:2017-10
IEC/TS 60079-32-1:2020-01-24

The ROTEX® is in accordance with the specifications respectively the applicable specifications of directive SI 2016 No. 1107.

According to directive SI 2016 No. 1107 the technical documentation is deposited with the notified body:

Eurofins CML
Identification number: 2503

Rheine, Place	2022-07-05 Date	i. V. Reinhard Wibbeling Engineering/R&D	i. V. Michael Brüning Product Manager